- **Easily Interfaced to Microprocessors**
- **On-Chip Data Latches**
- **Monotonic Over the Entire A/D Conversion Range**
- **Interchangeable With Analog Devices AD7528 and PMI PM-7528**
- **Fast Control Signaling for Digital Signal Processor (DSP) Applications Including Interface With TMS320**
- **Voltage-Mode Operation**
- **CMOS Technology**

KEY PERFORMANCE SPECIFICATIONS	
Resolution	8 bits
Linearity Error	1/2LSB
Power Dissipation at V_{DD} = 5V	20mW
Settling Time at V_{DD} = 5V	100ns
Propagation Delay Time at V_{DD} = 5V	80ns

DW, N OR PW PACKAGE
(TOP VIEW)

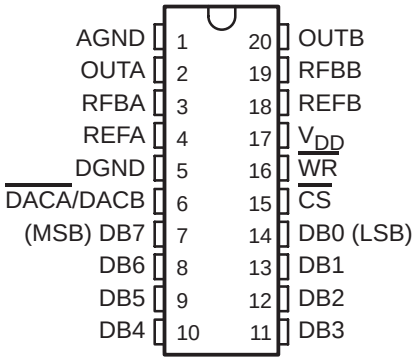

FN PACKAGE
(TOP VIEW)

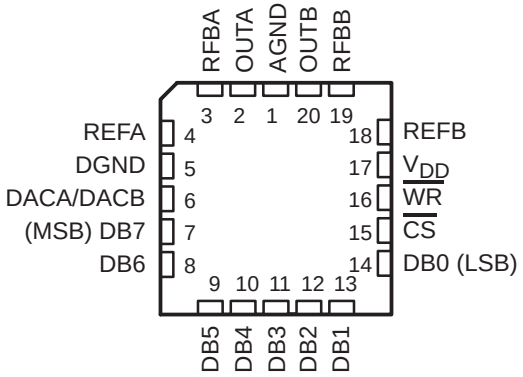

description

The TLC7528C, TLC7528E, and TLC7528I are dual, 8-bit, digital-to-analog converters (DACs) designed with separate on-chip data latches and feature exceptionally close DAC-to-DAC matching. Data are transferred to either of the two DAC data latches through a common, 8-bit, input port. Control input $\overline{\text{DACA}}$/DACB determines which DAC is to be loaded. The load cycle of these devices is similar to the write cycle of a random-access memory, allowing easy interface to most popular microprocessor buses and output ports. Segmenting the high-order bits minimizes glitches during changes in the most significant bits, where glitch impulse is typically the strongest.

These devices operate from a 5V to 15V power supply and dissipates less than 15mW (typical). The 2- or 4-quadrant multiplying makes these devices a sound choice for many microprocessor-controlled gain-setting and signal-control applications. It can be operated in voltage mode, which produces a voltage output rather than a current output. Refer to the typical application information in this data sheet.

The TLC7528C is characterized for operation from 0°C to +70°C. The TLC7528I is characterized for operation from −25°C to +85°C. The TLC7528E is characterized for operation from −40°C to +85°C.

Please be aware that an important notice concerning availability, standard warranty, and use in critical applications of Texas Instruments semiconductor products and disclaimers thereto appears at the end of this data sheet.

All trademarks are the property of their respective owners.

PRODUCTION DATA information is current as of publication date. Products conform to specifications per the terms of Texas Instruments standard warranty. Production processing does not necessarily include testing of all parameters.

Copyright © 2000−2008, Texas Instruments Incorporated

functional block diagram

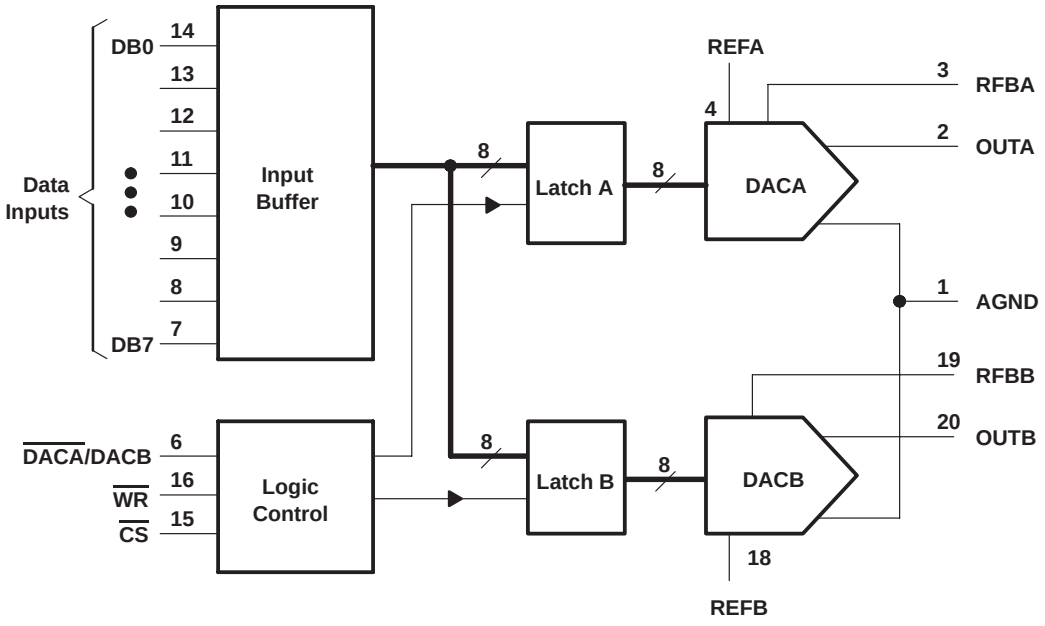

operating sequence

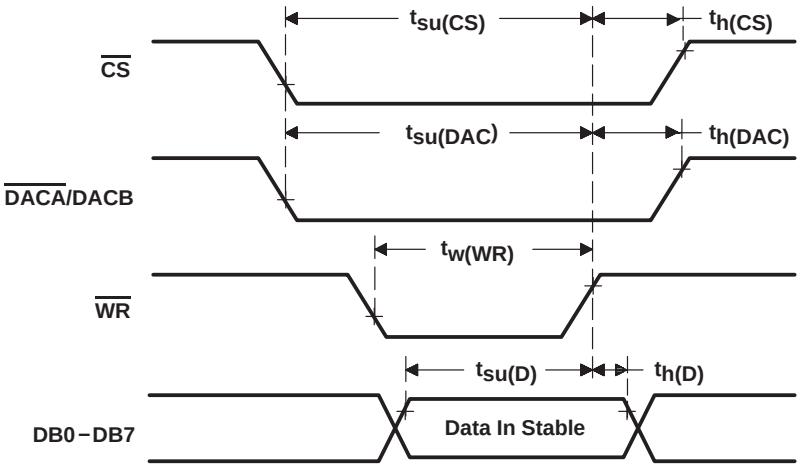

absolute maximum ratings over operating free-air temperature range (unless otherwise noted)†

Supply voltage range, V_{DD} (to AGND or DGND) . . . . . −0.3V to 16.5V
Voltage between AGND and DGND . . . . . $\pm V_{DD}$
Input voltage range, V_I (to DGND) . . . . . −0.3V to V_{DD} + 0.3
Reference voltage, V_{refA} or V_{refB} (to AGND) . . . . . ±25V
Feedback voltage V_{RFBA} or V_{RFBB} (to AGND) . . . . . ±25V
Input voltage (voltage mode out A, out B to AGND) . . . . . −0.3V to V_{DD} + 0.3
Output voltage, V_{OA} or V_{OB} (to AGND) . . . . . ±25V
Peak input current 10µA
Operating free-air temperature range, T_A: TLC7528C . . . . . 0°C to +70°C
TLC7528I . . . . . −25°C to +85°C
TLC7528E . . . . . −40°C to +85°C
Storage temperature range, T_{stg} . . . . . −65°C to +150°C
Case temperature for 10 seconds, T_C: FN package . . . . . +260°C
Lead temperature 1,6mm (1/16 inch) from case for 10 seconds: DW or N package . . . . . +260°C

† Stresses beyond those listed under “absolute maximum ratings” may cause permanent damage to the device. These are stress ratings only, and functional operation of the device at these or any other conditions beyond those indicated under “recommended operating conditions” is not implied. Exposure to absolute-maximum-rated conditions for extended periods may affect device reliability.

package/ordering information

For the most current package and ordering information, see the Package Option Addendum at the end of this document, or see the TI website at www.ti.com.

recommended operating conditions

		V_{DD} = 4.75V to 5.25V			V_{DD} = 14.5V to 15.5V			UNIT
		MIN	NOM	MAX	MIN	NOM	MAX	
Reference voltage, V_{refA} or V_{refB}			±10			±10		V
High-level input voltage, V_{IH}		2.4			13.5			V
Low-level input voltage, V_{IL}				0.8			1.5	V
$\overline{CS}$ setup time, $t_{su(CS)}$		50			50			ns
$\overline{CS}$ hold time, $t_{h(CS)}$		0			0			ns
DAC select setup time, $t_{su(DAC)}$		50			50			ns
DAC select hold time, $t_{h(DAC)}$		10			10			ns
Data bus input setup time $t_{su(D)}$		25			25			ns
Data bus input hold time $t_{h(D)}$		10			10			ns
Pulse duration, $\overline{WR}$ low, $t_{w(WR)}$		50			50			ns
Operating free-air temperature, T_A	TLC7628C	0		+70	0		+70	°C
	TLC7628I	−25		+85	−25		+85	
	TLC7628E	−40		+85	−40		+85	

electrical characteristics over recommended operating free-air temperature range, $V_{refA} = V_{refB} = 10V$, V_{OA} and V_{OB} at 0V (unless otherwise noted)

PARAMETER			TEST CONDITIONS	$V_{DD} = 5V$			$V_{DD} = 15V$			UNIT
				MIN	TYP†	MAX	MIN	TYP†	MAX	
I_{IH}	High-level input current		$V_I = V_{DD}$			10			10	µA
I_{IL}	Low-level input current		$V_I = 0$	5	12	−10	5	12	−10	µA
	Reference input impedance REFA or REFB to AGND					20			20	kΩ
I_{Ikg}	Output leakage current	OUTA	DAC data latch loaded with 00000000, $V_{refA} = \pm 10V$			±400			±200	nA
		OUTB	DAC data latch loaded with 00000000, $V_{refB} = \pm 10V$			±400			±200	
	Input resistance match (REFA to REFB)					±1%			±1%	
	DC supply sensitivity, $\Delta gain/\Delta V_{DD}$		$\Delta V_{DD} = \pm 10\%$			0.04			0.02	%/%
I_{DD}	Supply current (quiescent)		All digital inputs at V_{IH}min or V_{IL}max			2			2	mA
I_{DD}	Supply current (standby)		All digital inputs at 0V or V_{DD}			0.5			0.5	mA
C_i	Input capacitance	DB0−DB7				10			10	pF
		$\overline{WR}$, $\overline{CS}$, DACA/DACB				15			15	pF
C_o	Output capacitance (OUTA, OUTB)		DAC data latches loaded with 00000000			50			50	pF
			DAC data latches loaded with 11111111			120			120	

† All typical values are at $T_A = +25°C$.

operating characteristics over recommended operating free-air temperature range, $V_{refA} = V_{refB} = 10V$, V_{OA} and V_{OB} at 0V (unless otherwise noted)

PARAMETER		TEST CONDITIONS	$V_{DD} = 5V$			$V_{DD} = 15V$			UNIT
			MIN	TYP	MAX	MIN	TYP	MAX	
Linearity error					±1/2			±1/2	LSB
Settling time (to 1/2LSB)		See Note 1			100			100	ns
Gain error		See Note 2			2.5			2.5	LSB
AC feedthrough	REFA to OUTA	See Note 3			−65			−65	dB
	REFB to OUTB				−65			−65	
Temperature coefficient of gain		See Note 4			0.007			0.0035	%FSR/°C
Propagation delay (from digital input to 90% of final analog output current)		See Note 5			80			80	ns
Channel-to-channel isolation	REFA to OUTB	See Note 6		77			77		dB
	REFB to OUTA	See Note 7		77			77		
Digital-to-analog glitch impulse area		Measured for code transition from 00000000 to 11111111, $T_A = +25°C$		160			440		nV−s
Digital crosstalk		Measured for code transition from 00000000 to 11111111, $T_A = +25°C$		30			60		nV−s
Harmonic distortion		$V_i = 6V$, f = 1kHz, $T_A = +25°C$		−85			−85		dB

NOTES:
1. OUTA, OUTB load = 100Ω, C_{ext} = 13pF; $\overline{WR}$ and $\overline{CS}$ at 0V; DB0−DB7 at 0V to V_{DD} or V_{DD} to 0V.
2. Gain error is measured using an internal feedback resistor. Nominal full scale range (FSR) = V_{ref} − 1LSB.
3. V_{ref} = 20V peak-to-peak, 100kHz sine wave; DAC data latches loaded with 00000000.
4. Temperature coefficient of gain measured from 0°C to +25°C or from +25°C to +70°C.
5. $V_{refA} = V_{refB}$ = 10V; OUTA/OUTB load = 100Ω, C_{ext} = 13pF; $\overline{WR}$ and $\overline{CS}$ at 0V; DB0−DB7 at 0V to V_{DD} or V_{DD} to 0V.
6. Both DAC latches loaded with 11111111; V_{refA} = 20V peak-to-peak, 100kHz sine wave; V_{refB} = 0; T_A = +25°C.
7. Both DAC latches loaded with 11111111; V_{refB} = 20V peak-to-peak, 100kHz sine wave; V_{refA} = 0; T_A = +25°C.

PRINCIPLES OF OPERATION

These devices contain two identical, 8-bit-multiplying DACs, DACA and DACB. Each DAC consists of an inverted R-2R ladder, analog switches, and input data latches. Binary-weighted currents are switched between DAC output and AGND, thus maintaining a constant current in each ladder leg independent of the switch state. Most applications require only the addition of an external operational amplifier and voltage reference. A simplified DAC circuit for DACA with all digital inputs low is shown in Figure 1.

Figure 2 shows the DACA equivalent circuit. A similar equivalent circuit can be drawn for DACB. Both DACs share the analog ground terminal 1 (AGND). With all digital inputs high, the entire reference current flows to OUTA. A small leakage current (I_{lkg}) flows across internal junctions, and as with most semiconductor devices, doubles every 10°C. C_o is due to the parallel combination of the NMOS switches and has a value that depends on the number of switches connected to the output. The range of C_o is 50pF to 120pF maximum. The equivalent output resistance (r_o) varies with the input code from 0.8R to 3R where R is the nominal value of the ladder resistor in the R-2R network.

These devices interface to a microprocessor through the data bus, $\overline{CS}$, $\overline{WR}$, and $\overline{DACA}$/DACB control signals. When $\overline{CS}$ and $\overline{WR}$ are both low, the TLC7528 analog output, specified by the $\overline{DACA}$/DACB control line, responds to the activity on the DB0−DB7 data bus inputs. In this mode, the input latches are transparent and input data directly affects the analog output. When either the $\overline{CS}$ signal or $\overline{WR}$ signal goes high, the data on the DB0−DB7 inputs are latched until the $\overline{CS}$ and $\overline{WR}$ signals go low again. When $\overline{CS}$ is high, the data inputs are disabled regardless of the state of the $\overline{WR}$ signal.

PRINCIPLES OF OPERATION

The digital inputs of these devices provide TTL compatibility when operated from a supply voltage of 5V. These devices can operate with any supply voltage in the range from 5V to 15V; however, input logic levels are not TTL-compatible above 5V.

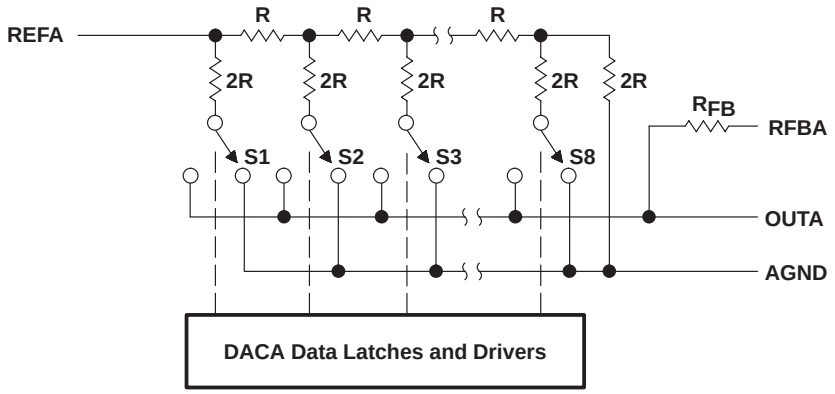

Figure 1. Simplified Functional Circuit for DACA

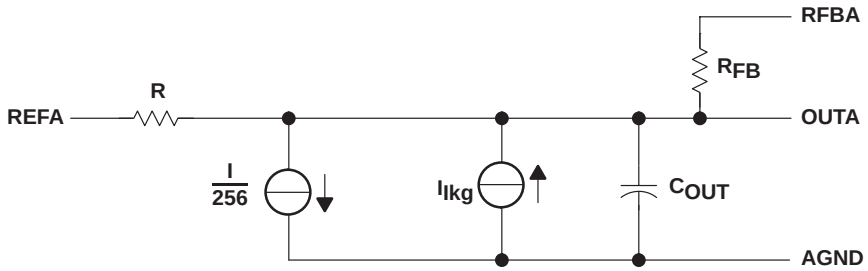

Figure 2. TLC7528 Equivalent Circuit, DACA Latch Loaded With 11111111

MODE SELECTION TABLE

$\overline{DACA}$/DACB	$\overline{CS}$	$\overline{WR}$	DACA	DACB
L	L	L	Write	Hold
H	L	L	Hold	Write
X	H	X	Hold	Hold
X	X	H	Hold	Hold

L = low level, H = high level, X = don't care

APPLICATION INFORMATION

These devices are capable of performing 2-quadrant or full 4-quadrant multiplication. Circuit configurations for 2-quadrant and 4-quadrant multiplication are shown in Figure 3 and Figure 4. Table 1 and Table 2 summarize input coding for unipolar and bipolar operation, respectively.

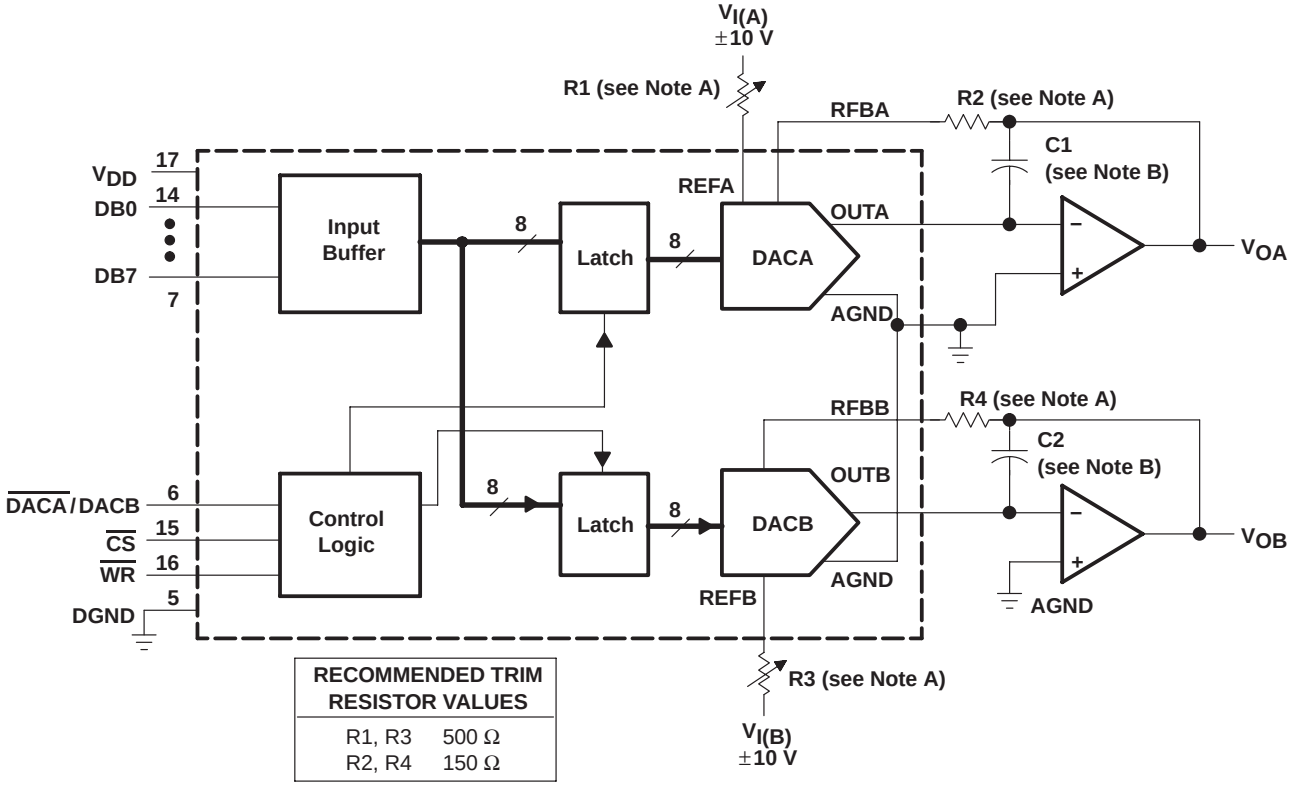

RECOMMENDED TRIM RESISTOR VALUES	
R1, R3	500 Ω
R2, R4	150 Ω

NOTES: A. R1, R2, R3, and R4 are used only if gain adjustment is required. See table for recommended values. Make gain adjustment with digital input of 255.
B. C1 and C2 phase compensation capacitors (10pF to 15pF) are required when using high-speed amplifiers to prevent ringing or oscillation.

Figure 3. Unipolar Operation (2-Quadrant Multiplication)

APPLICATION INFORMATION

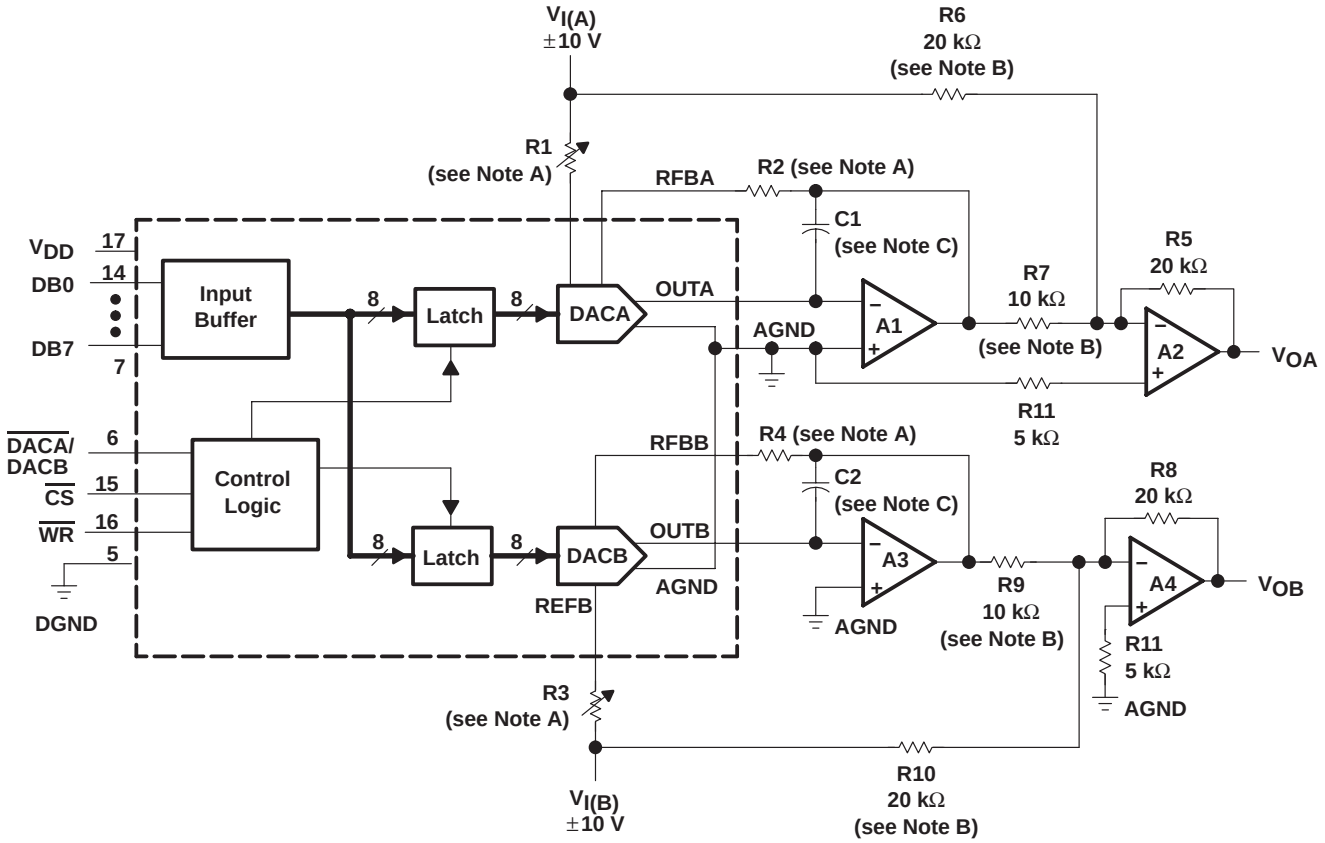

NOTES: A. R1, R2, R3, and R4 are used only if gain adjustment is required. See table in Figure 3 for recommended values. Adjust R1 for V_{OA} = 0V with code 10000000 in DACA latch. Adjust R3 for V_{OB} = 0V with 10000000 in DACB latch.
B. Matching and tracking are essential for resistor pairs R6, R7, R9, and R10.
C. C1 and C2 phase compensation capacitors (10pF to 15pF) may be required if A1 and A3 are high-speed amplifiers.

Figure 4. Bipolar Operation (4-Quadrant Operation)

Table 1. Unipolar Binary Code

DAC LATCH CONTENTS MSB LSB†	ANALOG OUTPUT
1 1 1 1 1 1 1 1	$-V_I$ (255/256)
1 0 0 0 0 0 0 1	$-V_I$ (129/256)
1 0 0 0 0 0 0 0	$-V_I$ (128/256) = $-V_i/2$
0 1 1 1 1 1 1 1	$-V_I$ (127/256)
0 0 0 0 0 0 0 1	$-V_I$ (1/256)
0 0 0 0 0 0 0 0	$-V_I$ (0/256) = 0

† 1LSB = $(2^{-8})V_I$

Table 2. Bipolar (Offset Binary) Code

DAC LATCH CONTENTS MSB LSB‡	ANALOG OUTPUT
1 1 1 1 1 1 1 1	V_I (127/128)
1 0 0 0 0 0 0 1	V_I (1/128)
1 0 0 0 0 0 0 0	0V
0 1 1 1 1 1 1 1	$-V_I$ (1/128)
0 0 0 0 0 0 0 1	$-V_I$ (127/128)
0 0 0 0 0 0 0 0	$-V_I$ (128/128)

‡ 1LSB = $(2^{-7})V_I$

APPLICATION INFORMATION

microprocessor interface information

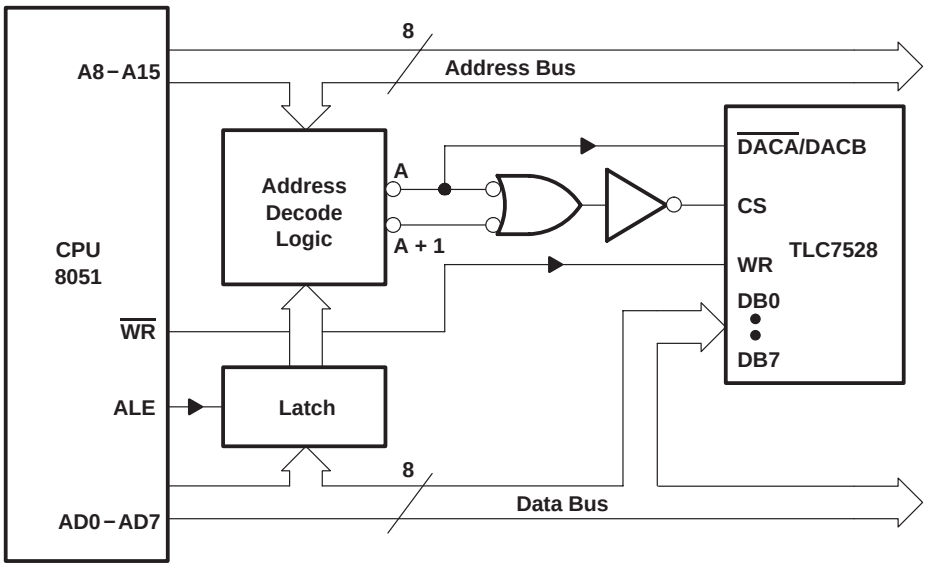

NOTE A: A = decoded address for TLC7528 DACA
A + 1 = decoded address for TLC7528 DACB

Figure 5. TLC7528: Intel 8051 Interface

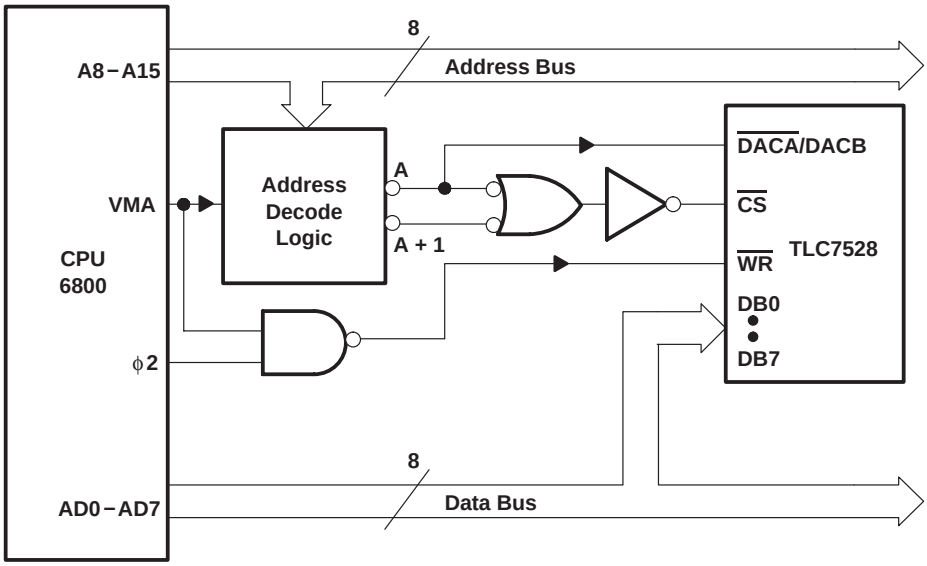

NOTE A: A = decoded address for TLC7528 DACA
A + 1 = decoded address for TLC7528 DACB

Figure 6. TLC7528: 6800 Interface

APPLICATION INFORMATION

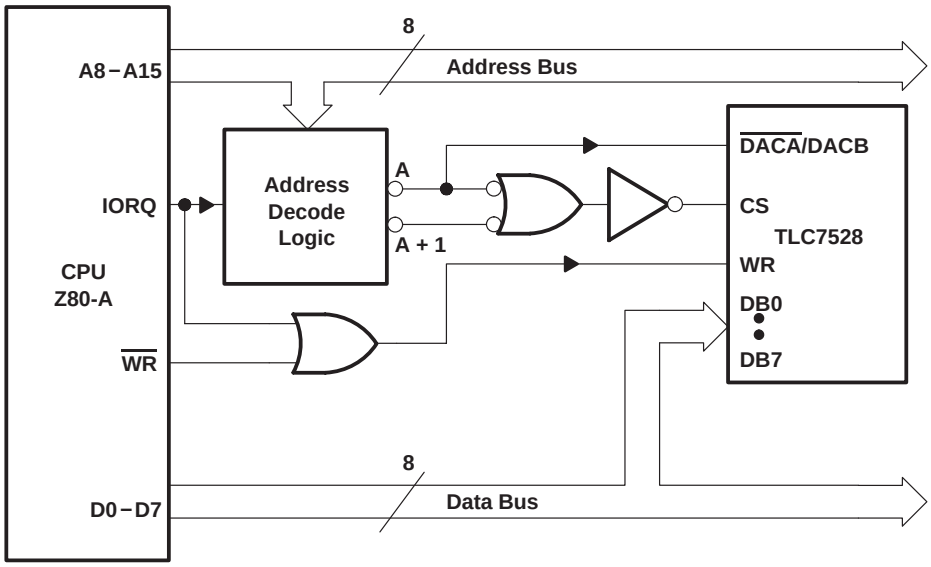

NOTE A: A = decoded address for TLC7528 DACA
A + 1 = decoded address for TLC7528 DACB

Figure 7. TLC7528 To Z-80A Interface

programmable window detector

The programmable window comparator shown in Figure 8 determines if the voltage applied to the DAC feedback resistors is within the limits programmed into the data latches of these devices. Input signal range depends on the reference and polarity; that is, the test input range is 0 to $-V_{ref}$. The DACA and DACB data latches are programmed with the upper and lower test limits. A signal within the programmed limits drives the output high.

APPLICATION INFORMATION

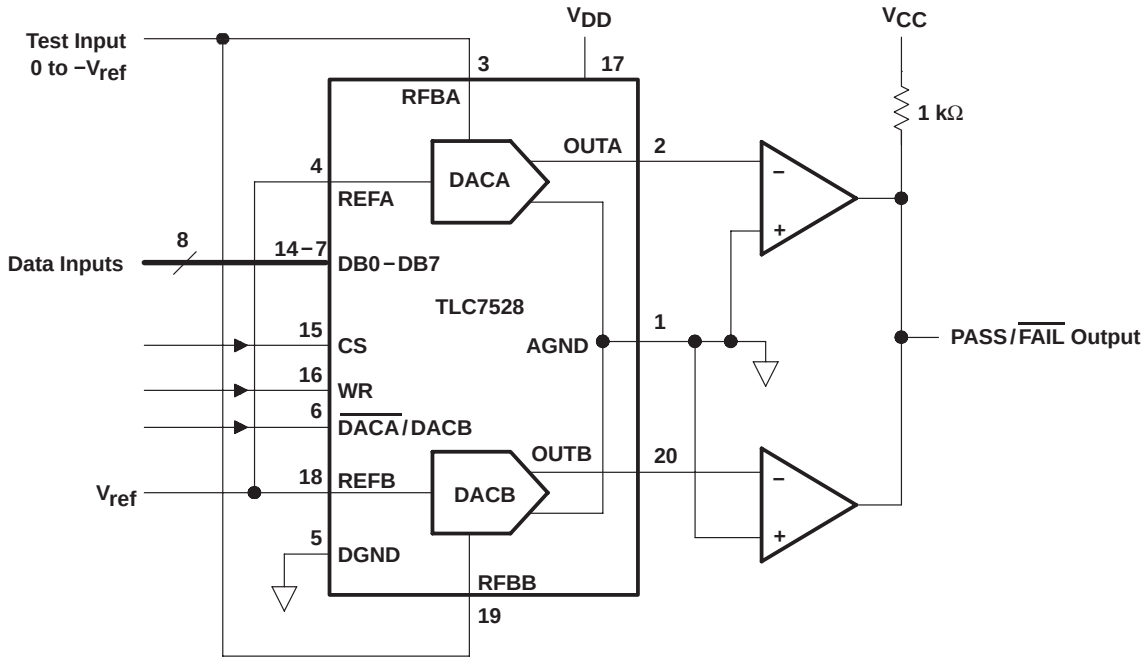

Figure 8. Digitally-Programmable Window Comparator (Upper- and Lower-Limit Tester)

digitally-controlled signal attenuator

Figure 9 shows a TLC7528 configured as a two-channel programmable attenuator. Applications include stereo audio and telephone signal level control. Table 3 shows input codes vs attenuation for a 0dB to 15.5dB range.

Attenuation dB = −20 $\log_{10}$ D/256, D = digital input code

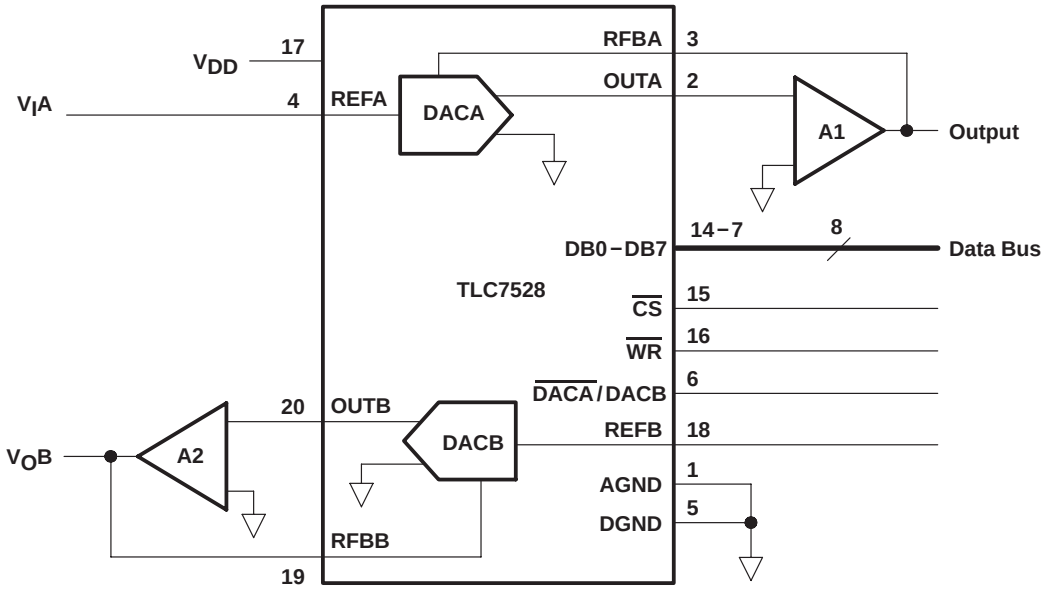

Figure 9. Digitally Controlled Dual Telephone Attenuator

APPLICATION INFORMATION

Table 3. Attenuation vs DACA, DACB Code

ATTEN (dB)	DAC INPUT CODE	CODE IN DECIMAL	ATTN (dB)	DAC INPUT CODE	CODE IN DECIMAL
0	1 1 1 1 1 1 1 1	255	8.0	0 1 1 0 0 1 1 0	102
0.5	1 1 1 1 0 0 1 0	242	8.5	0 1 1 0 0 0 0 0	96
1.0	1 1 1 0 0 1 0 0	228	9.0	0 1 0 1 1 0 1 1	91
1.5	1 1 0 1 0 1 1 1	215	9.5	0 1 0 1 0 1 1 0	86
2.0	1 1 0 0 1 0 1 1	203	10.0	0 1 0 1 0 0 0 1	81
2.5	1 1 0 0 0 0 0 0	192	10.5	0 1 0 0 1 1 0 0	76
3.0	1 0 1 1 0 1 0 1	181	11.0	0 1 0 0 1 0 0 0	72
3.5	1 0 1 0 1 0 1 1	171	11.5	0 1 0 0 0 1 0 0	68
4.0	1 0 1 0 0 0 1 0	162	12.0	0 1 0 0 0 0 0 0	64
4.5	1 0 0 1 1 0 0 0	152	12.5	0 0 1 1 1 1 0 1	61
5.0	1 0 0 1 1 1 1 1	144	13.0	0 0 1 1 1 0 0 1	57
5.5	1 0 0 0 1 0 0 0	136	13.5	0 0 1 1 0 1 1 0	54
6.0	1 0 0 0 0 0 0 0	128	14.0	0 0 1 1 0 0 1 1	51
6.5	0 1 1 1 1 0 0 1	121	14.5	0 0 1 1 0 0 0 0	48
7.0	0 1 1 1 0 0 1 0	114	15.0	0 0 1 0 1 1 1 0	46
7.5	0 1 1 0 1 1 0 0	108	15.5	0 0 1 0 1 0 1 1	43

programmable state-variable filter

This programmable state-variable or universal filter configuration provides low-pass, high-pass, and bandpass outputs, and is suitable for applications requiring microprocessor control of filter parameters.

As shown in Figure 10, DACA1 and DACB1 control the gain and Q of the filter while DACA2 and DACB2 control the cutoff frequency. Both halves of the DACA2 and DACB2 must track accurately in order for the cutoff-frequency equation to be true. With the TLC7528, this validity is easy to achieve.

$$f_C = \frac{1}{2\pi\ R1C1}$$

The programmable range for the cutoff or center frequency is 0kHz to 15kHz with a Q ranging from 0.3 to 4.5. This parameter defines the limits of the component values.

APPLICATION INFORMATION

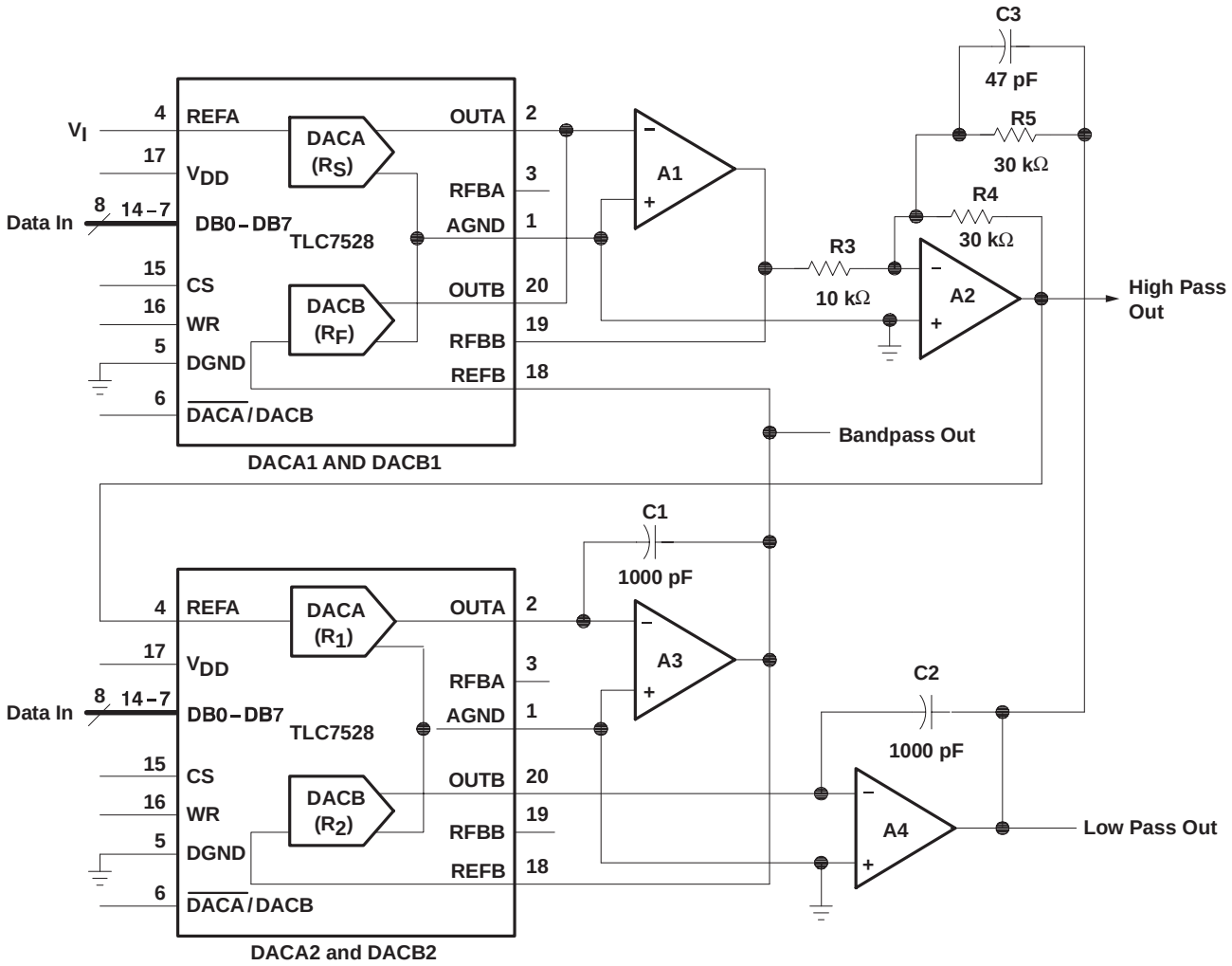

Circuit Equations:

$C_1 = C_2$, $R_1 = R_2$, $R_4 = R_5$

$$Q = \frac{R_3}{R_4} \times \frac{R_F}{R_{fb(DACB1)}}$$

Where:

R_{fb} is the internal resistor connected between OUTB and RFBB

$$G = -\frac{R_F}{R_S}$$

NOTES: A. Op-amps A1, A2, A3, and A4 are TL287.
B. $\overline{CS}$ compensates for the op-amp gain-bandwidth limitations.
C. DAC equivalent resistance equals $\frac{256 \times \text{(DAC ladder resistance)}}{\text{DAC digital code}}$

Figure 10. Digitally-Controlled State-Variable Filter

APPLICATION INFORMATION

voltage-mode operation

It is possible to operate the current multiplying D/A converter of these devices in a voltage mode. In the voltage mode, a fixed voltage is placed on the current output terminal. The analog output voltage is then available at the reference voltage terminal. Figure 11 is an example of a current multiplying D/A that operates in the voltage mode.

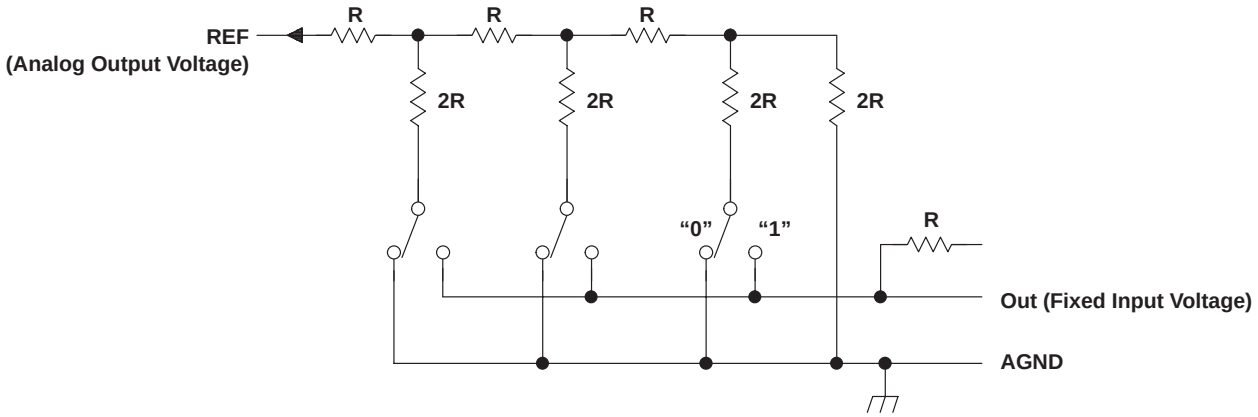

Figure 11. Voltage-Mode Operation

The following equation shows the relationship between the fixed input voltage and the analog output voltage:

$$V_O = V_I\ (D/256)$$

Where:

V_O = analog output voltage
V_I = fixed input voltage (must not be forced below 0V.)
D = digital input code converted to decimal

In voltage-mode operation, these devices meet the following specification:

PARAMETER	TEST CONDITIONS	MIN	MAX	UNIT
Linearity error at REFA or REFB	V_{DD} = 5V, OUTA or OUTB at 2.5V, T_A = +25°C		1	LSB

Revision History

DATE	REV	PAGE	SECTION	DESCRIPTION
11/08	E	13	Application Information	Corrected Figure 10.
6/07	D	Front Page	—	Deleted Available Options table.
		3	—	Inserted Package/Ordering information.

NOTE: Page numbers for previous revisions may differ from page numbers in the current version.

PACKAGING INFORMATION

Orderable Device	Status (1)	Package Type	Package Drawing	Pins	Package Qty	Eco Plan (2)	Lead/Ball Finish (6)	MSL Peak Temp (3)	Op Temp (°C)	Device Marking (4/5)	Samples
TLC7528CDW	ACTIVE	SOIC	DW	20	25	Green (RoHS & no Sb/Br)	CU NIPDAU	Level-1-260C-UNLIM	0 to 70	TLC7528C	Samples
TLC7528CDWG4	ACTIVE	SOIC	DW	20	25	Green (RoHS & no Sb/Br)	CU NIPDAU	Level-1-260C-UNLIM	0 to 70	TLC7528C	Samples
TLC7528CDWR	ACTIVE	SOIC	DW	20	2000	Green (RoHS & no Sb/Br)	CU NIPDAU	Level-1-260C-UNLIM	0 to 70	TLC7528C	Samples
TLC7528CDWRG4	ACTIVE	SOIC	DW	20	2000	Green (RoHS & no Sb/Br)	CU NIPDAU	Level-1-260C-UNLIM	0 to 70	TLC7528C	Samples
TLC7528CFN	ACTIVE	PLCC	FN	20	46	Green (RoHS & no Sb/Br)	CU SN	Level-1-260C-UNLIM	0 to 70	TLC7528C	Samples
TLC7528CFNG3	ACTIVE	PLCC	FN	20	46	Green (RoHS & no Sb/Br)	CU SN	Level-1-260C-UNLIM	0 to 70	TLC7528C	Samples
TLC7528CFNR	ACTIVE	PLCC	FN	20	1000	Green (RoHS & no Sb/Br)	CU SN	Level-1-260C-UNLIM	0 to 70	TLC7528C	Samples
TLC7528CN	ACTIVE	PDIP	N	20	20	Pb-Free (RoHS)	CU NIPDAU	N / A for Pkg Type	0 to 70	TLC7528CN	Samples
TLC7528CNS	ACTIVE	SO	NS	20	40	Green (RoHS & no Sb/Br)	CU NIPDAU	Level-1-260C-UNLIM	0 to 70	TLC7528	Samples
TLC7528CNSR	ACTIVE	SO	NS	20	2000	Green (RoHS & no Sb/Br)	CU NIPDAU	Level-1-260C-UNLIM	0 to 70	TLC7528	Samples
TLC7528CPW	ACTIVE	TSSOP	PW	20	70	Green (RoHS & no Sb/Br)	CU NIPDAU	Level-1-260C-UNLIM	0 to 70	TLC7528C	Samples
TLC7528CPWG4	ACTIVE	TSSOP	PW	20	70	Green (RoHS & no Sb/Br)	CU NIPDAU	Level-1-260C-UNLIM	0 to 70	TLC7528C	Samples
TLC7528CPWR	ACTIVE	TSSOP	PW	20	2000	Green (RoHS & no Sb/Br)	CU NIPDAU	Level-1-260C-UNLIM	0 to 70	TLC7528C	Samples
TLC7528CPWRG4	ACTIVE	TSSOP	PW	20	2000	Green (RoHS & no Sb/Br)	CU NIPDAU	Level-1-260C-UNLIM	0 to 70	TLC7528C	Samples
TLC7528EDW	ACTIVE	SOIC	DW	20	25	Green (RoHS & no Sb/Br)	CU NIPDAU	Level-1-260C-UNLIM	-40 to 85	TLC7528E	Samples
TLC7528EDWG4	ACTIVE	SOIC	DW	20	25	Green (RoHS & no Sb/Br)	CU NIPDAU	Level-1-260C-UNLIM	-40 to 85	TLC7528E	Samples
TLC7528EDWR	ACTIVE	SOIC	DW	20	2000	Green (RoHS & no Sb/Br)	CU NIPDAU	Level-1-260C-UNLIM	-40 to 85	TLC7528E	Samples

Orderable Device	Status (1)	Package Type	Package Drawing	Pins	Package Qty	Eco Plan (2)	Lead/Ball Finish (6)	MSL Peak Temp (3)	Op Temp (°C)	Device Marking (4/5)	Samples
TLC7528EN	ACTIVE	PDIP	N	20	20	Pb-Free (RoHS)	CU NIPDAU	N / A for Pkg Type	-40 to 85	TLC7528EN	Samples
TLC7528IDW	ACTIVE	SOIC	DW	20	25	Green (RoHS & no Sb/Br)	CU NIPDAU	Level-1-260C-UNLIM	-25 to 85	TLC7528I	Samples
TLC7528IDWG4	ACTIVE	SOIC	DW	20	25	Green (RoHS & no Sb/Br)	CU NIPDAU	Level-1-260C-UNLIM	-25 to 85	TLC7528I	Samples
TLC7528IDWR	ACTIVE	SOIC	DW	20	2000	Green (RoHS & no Sb/Br)	CU NIPDAU	Level-1-260C-UNLIM	-25 to 85	TLC7528I	Samples
TLC7528IDWRG4	ACTIVE	SOIC	DW	20	2000	Green (RoHS & no Sb/Br)	CU NIPDAU	Level-1-260C-UNLIM	-25 to 85	TLC7528I	Samples
TLC7528IFN	ACTIVE	PLCC	FN	20	46	Green (RoHS & no Sb/Br)	CU SN	Level-1-260C-UNLIM	-25 to 85	TLC7528I	Samples
TLC7528IFNG3	ACTIVE	PLCC	FN	20	46	Green (RoHS & no Sb/Br)	CU SN	Level-1-260C-UNLIM	-25 to 85	TLC7528I	Samples
TLC7528IN	ACTIVE	PDIP	N	20	20	Pb-Free (RoHS)	CU NIPDAU	N / A for Pkg Type	-25 to 85	TLC7528IN	Samples
TLC7528INE4	ACTIVE	PDIP	N	20	20	Pb-Free (RoHS)	CU NIPDAU	N / A for Pkg Type	-25 to 85	TLC7528IN	Samples
TLC7528IPW	ACTIVE	TSSOP	PW	20	70	Green (RoHS & no Sb/Br)	CU NIPDAU	Level-1-260C-UNLIM	-25 to 85	TLC7528I	Samples
TLC7528IPWG4	ACTIVE	TSSOP	PW	20	70	Green (RoHS & no Sb/Br)	CU NIPDAU	Level-1-260C-UNLIM	-25 to 85	TLC7528I	Samples
TLC7528IPWR	ACTIVE	TSSOP	PW	20	2000	Green (RoHS & no Sb/Br)	CU NIPDAU	Level-1-260C-UNLIM	-25 to 85	TLC7528I	Samples

(1) The marketing status values are defined as follows:
ACTIVE: Product device recommended for new designs.
LIFEBUY: TI has announced that the device will be discontinued, and a lifetime-buy period is in effect.
NRND: Not recommended for new designs. Device is in production to support existing customers, but TI does not recommend using this part in a new design.
PREVIEW: Device has been announced but is not in production. Samples may or may not be available.
OBSOLETE: TI has discontinued the production of the device.

(2) Eco Plan - The planned eco-friendly classification: Pb-Free (RoHS), Pb-Free (RoHS Exempt), or Green (RoHS & no Sb/Br) - please check http://www.ti.com/productcontent for the latest availability information and additional product content details.
TBD: The Pb-Free/Green conversion plan has not been defined.
Pb-Free (RoHS): TI's terms "Lead-Free" or "Pb-Free" mean semiconductor products that are compatible with the current RoHS requirements for all 6 substances, including the requirement that lead not exceed 0.1% by weight in homogeneous materials. Where designed to be soldered at high temperatures, TI Pb-Free products are suitable for use in specified lead-free processes.

Pb-Free (RoHS Exempt): This component has a RoHS exemption for either 1) lead-based flip-chip solder bumps used between the die and package, or 2) lead-based die adhesive used between the die and leadframe. The component is otherwise considered Pb-Free (RoHS compatible) as defined above.
Green (RoHS & no Sb/Br): TI defines "Green" to mean Pb-Free (RoHS compatible), and free of Bromine (Br) and Antimony (Sb) based flame retardants (Br or Sb do not exceed 0.1% by weight in homogeneous material)

(3) MSL, Peak Temp. - The Moisture Sensitivity Level rating according to the JEDEC industry standard classifications, and peak solder temperature.

(4) There may be additional marking, which relates to the logo, the lot trace code information, or the environmental category on the device.

(5) Multiple Device Markings will be inside parentheses. Only one Device Marking contained in parentheses and separated by a "~" will appear on a device. If a line is indented then it is a continuation of the previous line and the two combined represent the entire Device Marking for that device.

(6) Lead/Ball Finish - Orderable Devices may have multiple material finish options. Finish options are separated by a vertical ruled line. Lead/Ball Finish values may wrap to two lines if the finish value exceeds the maximum column width.

Important Information and Disclaimer: The information provided on this page represents TI's knowledge and belief as of the date that it is provided. TI bases its knowledge and belief on information provided by third parties, and makes no representation or warranty as to the accuracy of such information. Efforts are underway to better integrate information from third parties. TI has taken and continues to take reasonable steps to provide representative and accurate information but may not have conducted destructive testing or chemical analysis on incoming materials and chemicals. TI and TI suppliers consider certain information to be proprietary, and thus CAS numbers and other limited information may not be available for release.

In no event shall TI's liability arising out of such information exceed the total purchase price of the TI part(s) at issue in this document sold by TI to Customer on an annual basis.

TAPE AND REEL INFORMATION

REEL DIMENSIONS

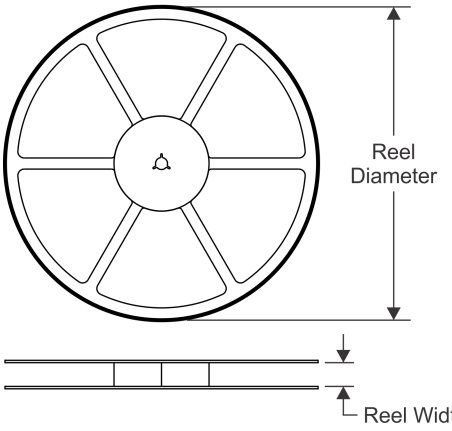

TAPE DIMENSIONS

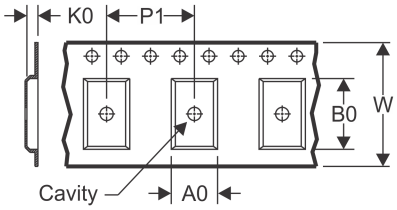

A0	Dimension designed to accommodate the component width
B0	Dimension designed to accommodate the component length
K0	Dimension designed to accommodate the component thickness
W	Overall width of the carrier tape
P1	Pitch between successive cavity centers

QUADRANT ASSIGNMENTS FOR PIN 1 ORIENTATION IN TAPE

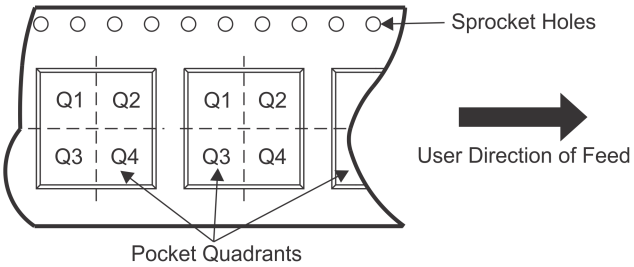

*All dimensions are nominal

Device	Package Type	Package Drawing	Pins	SPQ	Reel Diameter (mm)	Reel Width W1 (mm)	A0 (mm)	B0 (mm)	K0 (mm)	P1 (mm)	W (mm)	Pin1 Quadrant
TLC7528CNSR	SO	NS	20	2000	330.0	24.4	8.2	13.0	2.5	12.0	24.0	Q1
TLC7528EDWR	SOIC	DW	20	2000	330.0	24.4	10.8	13.3	2.7	12.0	24.0	Q1
TLC7528IDWR	SOIC	DW	20	2000	330.0	24.4	10.8	13.3	2.7	12.0	24.0	Q1
TLC7528IPWR	TSSOP	PW	20	2000	330.0	16.4	6.95	7.1	1.6	8.0	16.0	Q1

TAPE AND REEL BOX DIMENSIONS

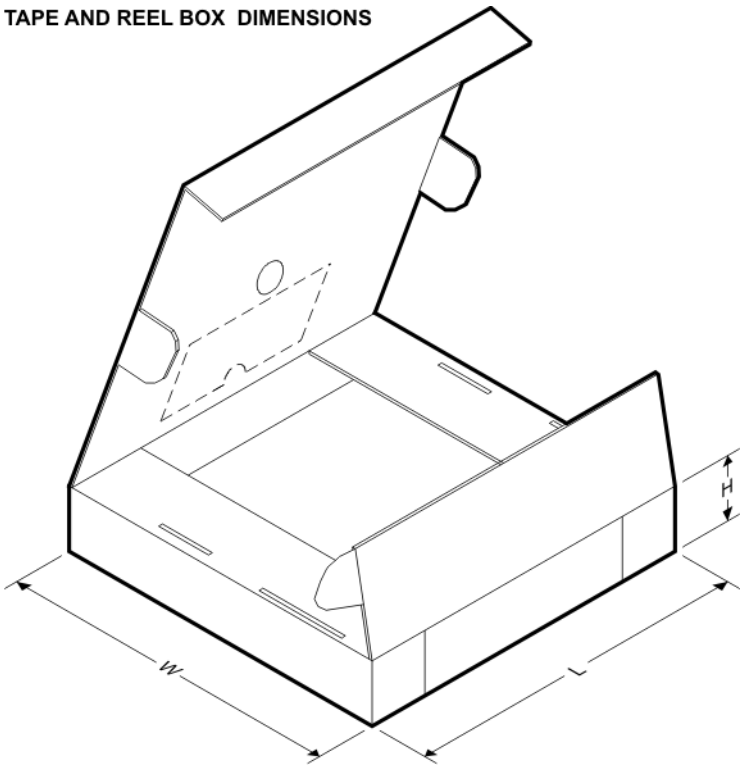

*All dimensions are nominal

Device	Package Type	Package Drawing	Pins	SPQ	Length (mm)	Width (mm)	Height (mm)
TLC7528CNSR	SO	NS	20	2000	367.0	367.0	45.0
TLC7528EDWR	SOIC	DW	20	2000	367.0	367.0	45.0
TLC7528IDWR	SOIC	DW	20	2000	367.0	367.0	45.0
TLC7528IPWR	TSSOP	PW	20	2000	367.0	367.0	38.0

DW (R–PDSO–G20) PLASTIC SMALL OUTLINE

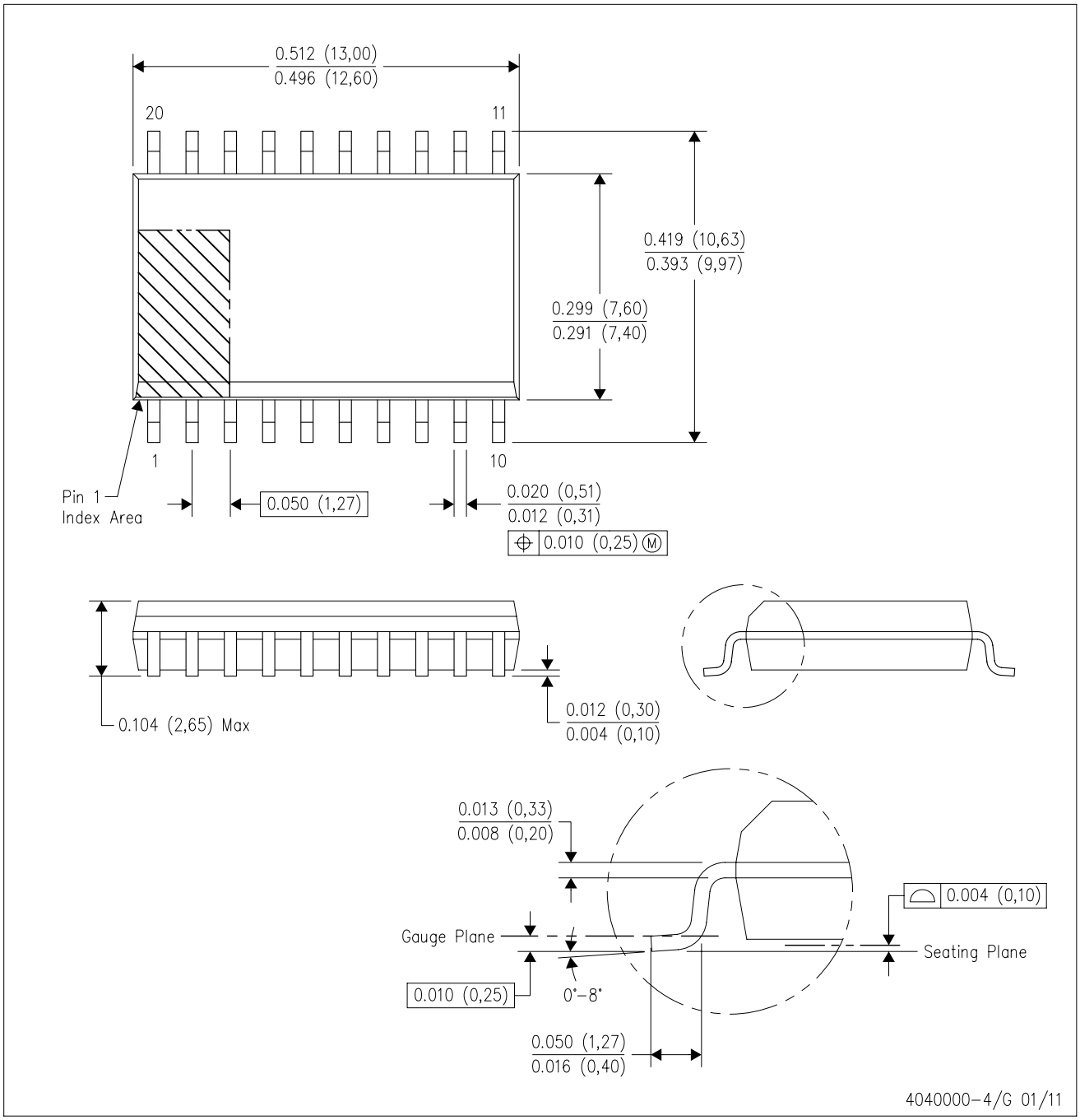

NOTES:
A. All linear dimensions are in inches (millimeters). Dimensioning and tolerancing per ASME Y14.5M–1994.
B. This drawing is subject to change without notice.
C. Body dimensions do not include mold flash or protrusion not to exceed 0.006 (0,15).
D. Falls within JEDEC MS–013 variation AC.

DW (R–PDSO–G20) PLASTIC SMALL OUTLINE

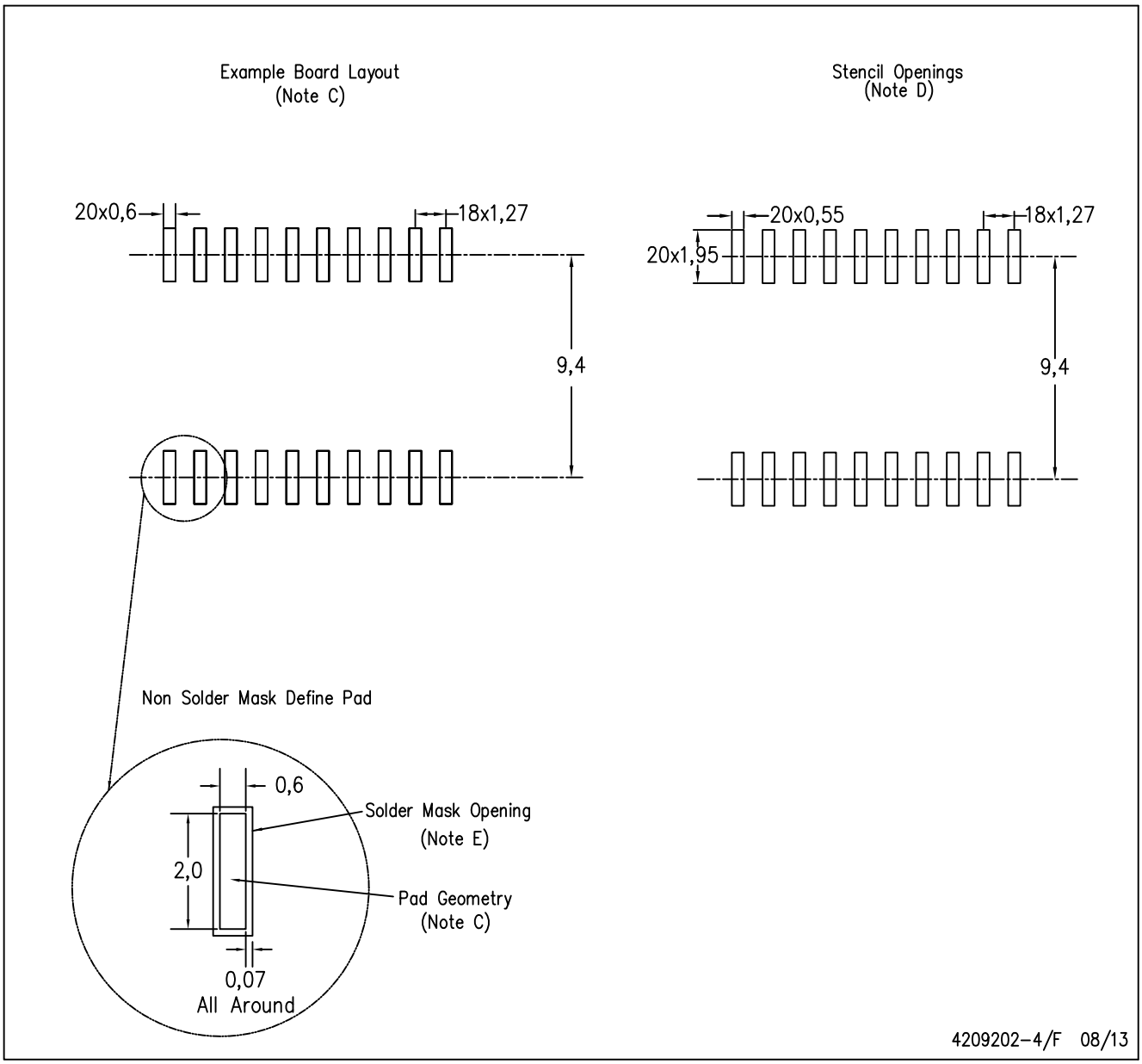

NOTES:
A. All linear dimensions are in millimeters.
B. This drawing is subject to change without notice.
C. Refer to IPC7351 for alternate board design.
D. Laser cutting apertures with trapezoidal walls and also rounding corners will offer better paste release. Customers should contact their board assembly site for stencil design recommendations. Refer to IPC–7525
E. Customers should contact their board fabrication site for solder mask tolerances between and around signal pads.

PW (R-PDSO-G20) PLASTIC SMALL OUTLINE

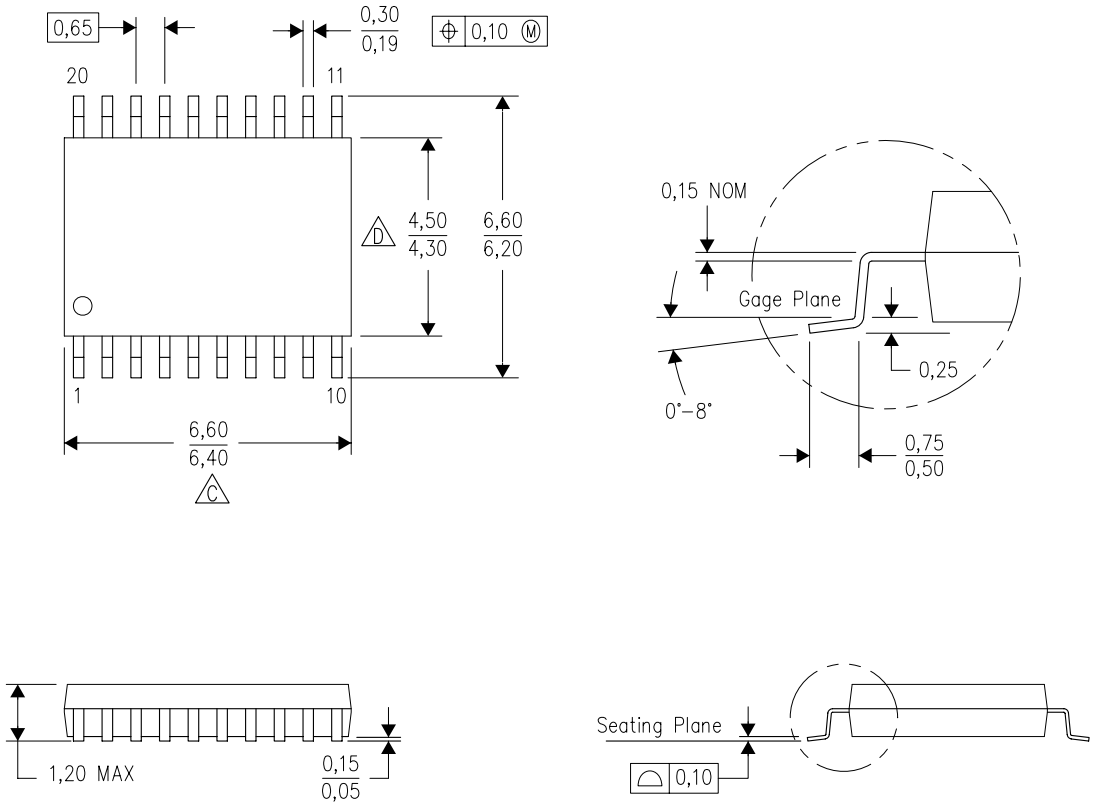

4040064-5/G 02/11

NOTES:
A. All linear dimensions are in millimeters. Dimensioning and tolerancing per ASME Y14.5M-1994.
B. This drawing is subject to change without notice.
C. Body length does not include mold flash, protrusions, or gate burrs. Mold flash, protrusions, or gate burrs shall not exceed 0,15 each side.
D. Body width does not include interlead flash. Interlead flash shall not exceed 0,25 each side.
E. Falls within JEDEC MO-153

PW (R-PDSO-G20) PLASTIC SMALL OUTLINE

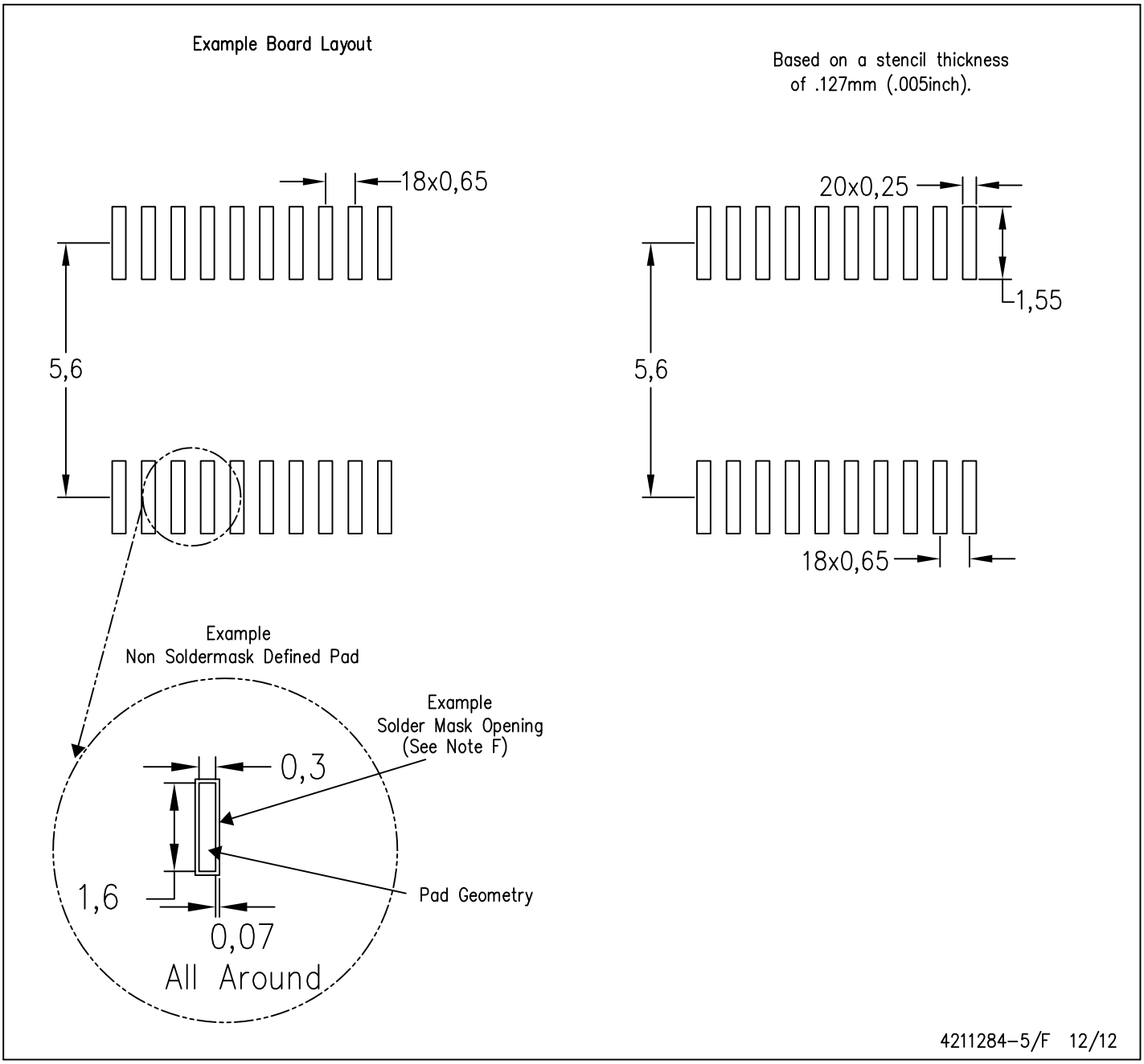

NOTES:
A. All linear dimensions are in millimeters.
B. This drawing is subject to change without notice.
C. Publication IPC-7351 is recommended for alternate design.
D. Laser cutting apertures with trapezoidal walls and also rounding corners will offer better paste release. Customers should contact their board assembly site for stencil design recommendations. Refer to IPC-7525 for other stencil recommendations.
E. Customers should contact their board fabrication site for solder mask tolerances between and around signal pads.

FN (S-PQCC-J**)

PLASTIC J-LEADED CHIP CARRIER

20 PIN SHOWN

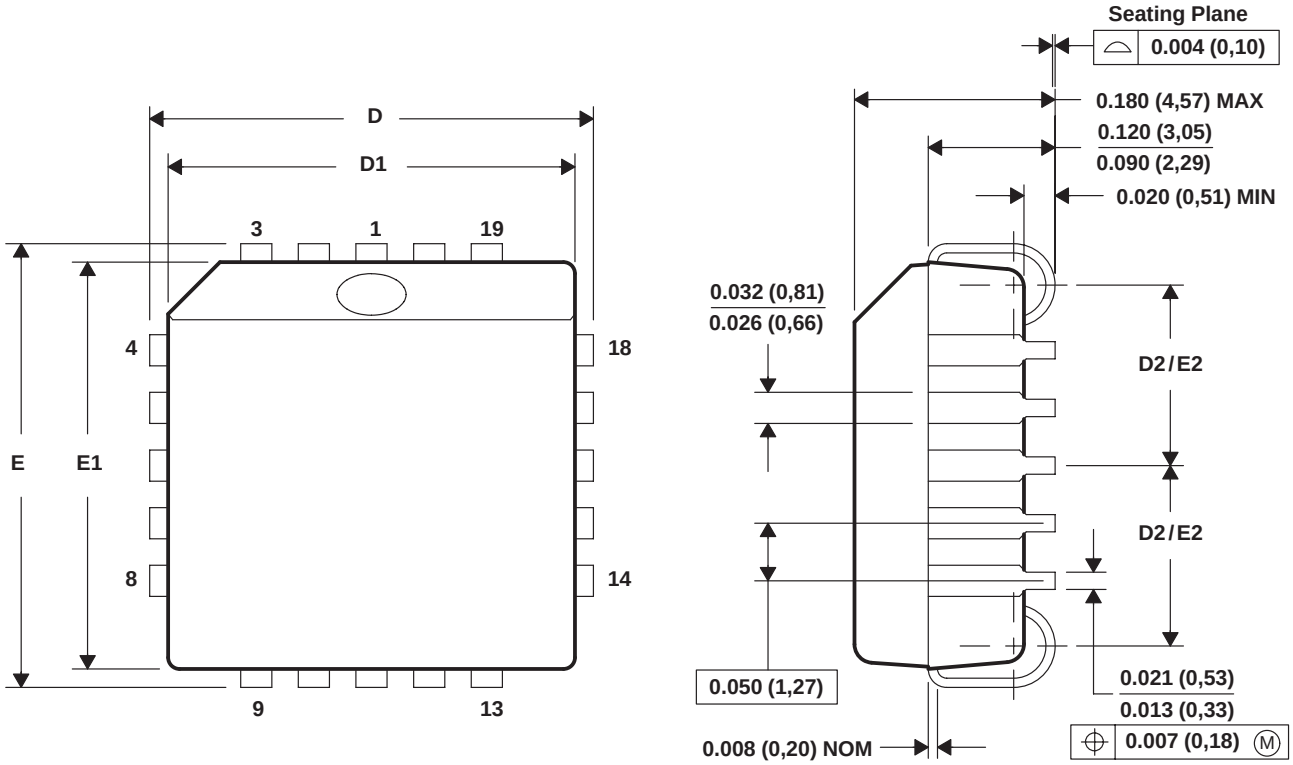

NO. OF PINS **	D / E		D1 / E1		D2 / E2	
	MIN	MAX	MIN	MAX	MIN	MAX
20	0.385 (9,78)	0.395 (10,03)	0.350 (8,89)	0.356 (9,04)	0.141 (3,58)	0.169 (4,29)
28	0.485 (12,32)	0.495 (12,57)	0.450 (11,43)	0.456 (11,58)	0.191 (4,85)	0.219 (5,56)
44	0.685 (17,40)	0.695 (17,65)	0.650 (16,51)	0.656 (16,66)	0.291 (7,39)	0.319 (8,10)
52	0.785 (19,94)	0.795 (20,19)	0.750 (19,05)	0.756 (19,20)	0.341 (8,66)	0.369 (9,37)
68	0.985 (25,02)	0.995 (25,27)	0.950 (24,13)	0.958 (24,33)	0.441 (11,20)	0.469 (11,91)
84	1.185 (30,10)	1.195 (30,35)	1.150 (29,21)	1.158 (29,41)	0.541 (13,74)	0.569 (14,45)

4040005 / B 03/95

NOTES: A. All linear dimensions are in inches (millimeters).
B. This drawing is subject to change without notice.
C. Falls within JEDEC MS-018

MECHANICAL DATA

NS (R-PDSO-G)** **PLASTIC SMALL-OUTLINE PACKAGE**

14-PINS SHOWN

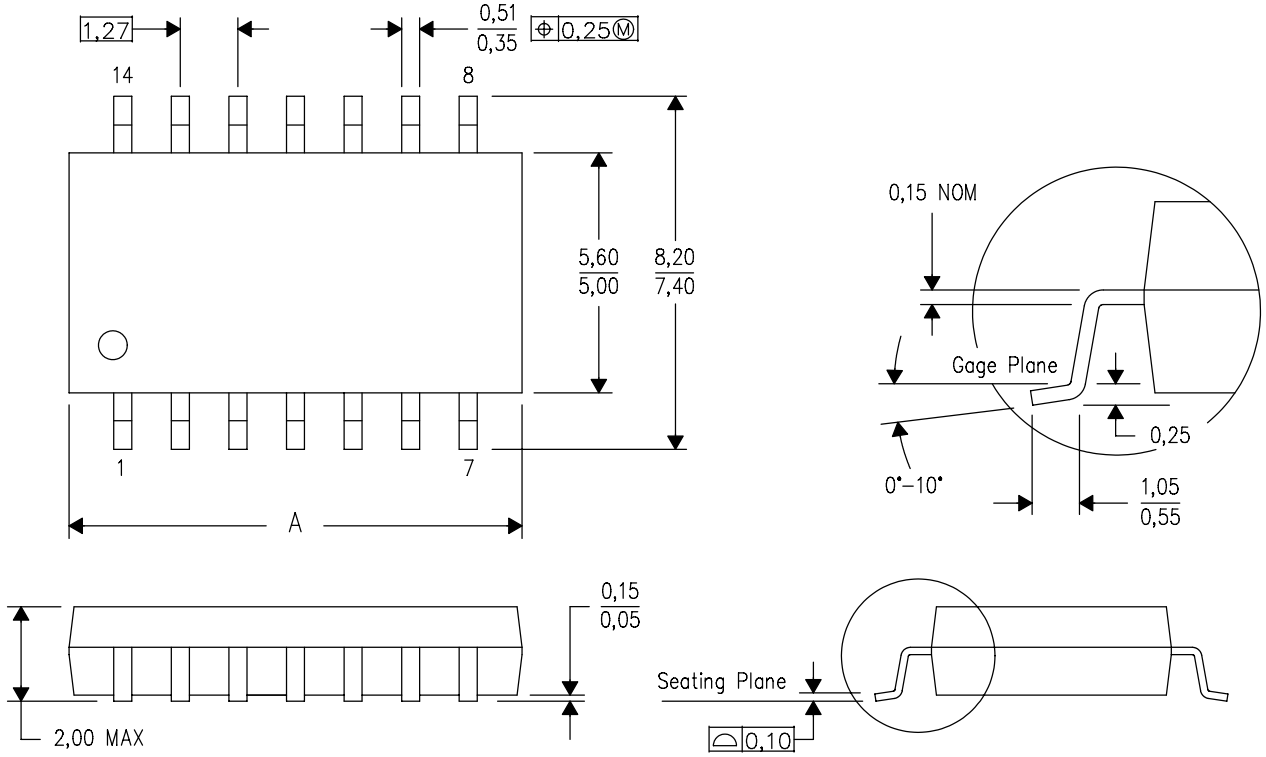

DIM \ PINS **	14	16	20	24
A MAX	10,50	10,50	12,90	15,30
A MIN	9,90	9,90	12,30	14,70

4040062/C 03/03

NOTES:
A. All linear dimensions are in millimeters.
B. This drawing is subject to change without notice.
C. Body dimensions do not include mold flash or protrusion, not to exceed 0,15.

IMPORTANT NOTICE

Texas Instruments Incorporated and its subsidiaries (TI) reserve the right to make corrections, enhancements, improvements and other changes to its semiconductor products and services per JESD46, latest issue, and to discontinue any product or service per JESD48, latest issue. Buyers should obtain the latest relevant information before placing orders and should verify that such information is current and complete. All semiconductor products (also referred to herein as “components”) are sold subject to TI’s terms and conditions of sale supplied at the time of order acknowledgment.

TI warrants performance of its components to the specifications applicable at the time of sale, in accordance with the warranty in TI’s terms and conditions of sale of semiconductor products. Testing and other quality control techniques are used to the extent TI deems necessary to support this warranty. Except where mandated by applicable law, testing of all parameters of each component is not necessarily performed.

TI assumes no liability for applications assistance or the design of Buyers’ products. Buyers are responsible for their products and applications using TI components. To minimize the risks associated with Buyers’ products and applications, Buyers should provide adequate design and operating safeguards.

TI does not warrant or represent that any license, either express or implied, is granted under any patent right, copyright, mask work right, or other intellectual property right relating to any combination, machine, or process in which TI components or services are used. Information published by TI regarding third-party products or services does not constitute a license to use such products or services or a warranty or endorsement thereof. Use of such information may require a license from a third party under the patents or other intellectual property of the third party, or a license from TI under the patents or other intellectual property of TI.

Reproduction of significant portions of TI information in TI data books or data sheets is permissible only if reproduction is without alteration and is accompanied by all associated warranties, conditions, limitations, and notices. TI is not responsible or liable for such altered documentation. Information of third parties may be subject to additional restrictions.

Resale of TI components or services with statements different from or beyond the parameters stated by TI for that component or service voids all express and any implied warranties for the associated TI component or service and is an unfair and deceptive business practice. TI is not responsible or liable for any such statements.

Buyer acknowledges and agrees that it is solely responsible for compliance with all legal, regulatory and safety-related requirements concerning its products, and any use of TI components in its applications, notwithstanding any applications-related information or support that may be provided by TI. Buyer represents and agrees that it has all the necessary expertise to create and implement safeguards which anticipate dangerous consequences of failures, monitor failures and their consequences, lessen the likelihood of failures that might cause harm and take appropriate remedial actions. Buyer will fully indemnify TI and its representatives against any damages arising out of the use of any TI components in safety-critical applications.

In some cases, TI components may be promoted specifically to facilitate safety-related applications. With such components, TI’s goal is to help enable customers to design and create their own end-product solutions that meet applicable functional safety standards and requirements. Nonetheless, such components are subject to these terms.

No TI components are authorized for use in FDA Class III (or similar life-critical medical equipment) unless authorized officers of the parties have executed a special agreement specifically governing such use.

Only those TI components which TI has specifically designated as military grade or “enhanced plastic” are designed and intended for use in military/aerospace applications or environments. Buyer acknowledges and agrees that any military or aerospace use of TI components which have ***not*** been so designated is solely at the Buyer's risk, and that Buyer is solely responsible for compliance with all legal and regulatory requirements in connection with such use.

TI has specifically designated certain components as meeting ISO/TS16949 requirements, mainly for automotive use. In any case of use of non-designated products, TI will not be responsible for any failure to meet ISO/TS16949.

Products		**Applications**	
Audio	www.ti.com/audio	Automotive and Transportation	www.ti.com/automotive
Amplifiers	amplifier.ti.com	Communications and Telecom	www.ti.com/communications
Data Converters	dataconverter.ti.com	Computers and Peripherals	www.ti.com/computers
DLP® Products	www.dlp.com	Consumer Electronics	www.ti.com/consumer-apps
DSP	dsp.ti.com	Energy and Lighting	www.ti.com/energy
Clocks and Timers	www.ti.com/clocks	Industrial	www.ti.com/industrial
Interface	interface.ti.com	Medical	www.ti.com/medical
Logic	logic.ti.com	Security	www.ti.com/security
Power Mgmt	power.ti.com	Space, Avionics and Defense	www.ti.com/space-avionics-defense
Microcontrollers	microcontroller.ti.com	Video and Imaging	www.ti.com/video
RFID	www.ti-rfid.com		
OMAP Applications Processors	www.ti.com/omap	**TI E2E Community**	e2e.ti.com
Wireless Connectivity	www.ti.com/wirelessconnectivity		

Mailing Address: Texas Instruments, Post Office Box 655303, Dallas, Texas 75265
Copyright © 2014, Texas Instruments Incorporated